Lighting
Wall 300 cm
Black anodized

EAN 5414425235667

Functions & features

▪ Control method	Gesture Control

Dimensions

▪ Product dimensions (WxDxH) (mm)	2949 x 30 x 80

Lighting

▪ Functional lighting type	LED
▪ Functional light dimmable	▪
▪ Gross luminous flux functional lighting (Lm/m)	1983
▪ Color functional light (K)	2700-4000
▪ Color Rendering Index (CRI)	≥90
▪ Ambient lighting type	LED
▪ Ambient light dimmable	▪
▪ Gross luminous flux ambient lighting (Lm/m)	324
▪ Color ambient light	RGBW

Technical specifications

▪ Maximum power (W)	68
▪ Frequency (Hz)	50
▪ Power consumption in stand-by-mode (Ps) (W)	0
▪ Net weight (kg)	7
▪ Position electrical cable	Left
▪ Length power supply cable (m)	3
▪ Safetyclass	II
▪ Voltage lighting (V)	230

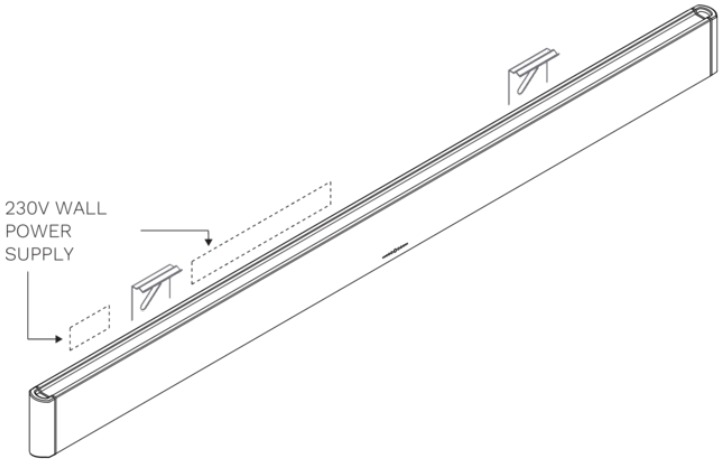
230V WALL
POWER
SUPPLY

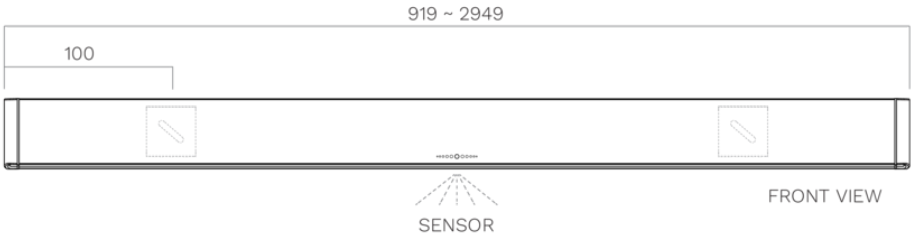
919 ~ 2949
100
SENSOR
FRONT VIEW

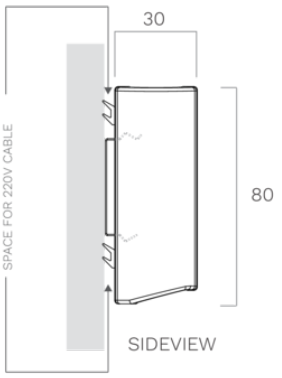
30
80
SPACE FOR 220V CABLE
SIDEVIEW

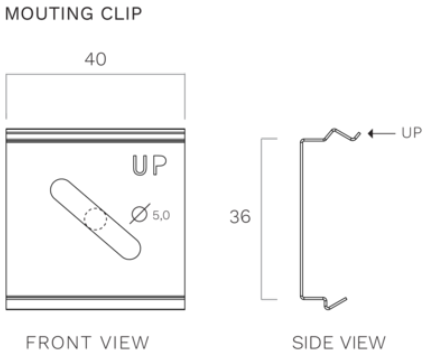
MOUTING CLIP
40
UP
Ø 5,0
36
UP
FRONT VIEW
SIDE VIEW